GB

Forced draught gas burner

Two stage operation

CODE	MODEL	TYPE
3757714	RIELLO 40 GS20D	577T1

20063817 (4) - 07/2022

Translation of the original instructions

1 Information and general warnings ... 3
1.1 Information about the instruction manual ... 3
1.1.1 Introduction ... 3
1.1.2 General dangers ... 3
1.1.3 Other symbols ... 3
1.1.4 Delivery of the system and the instruction manual ... 4
1.2 Guarantee and responsibility ... 4

2 Safety and prevention ... 5
2.1 Introduction ... 5
2.2 Personnel training ... 5

3 Technical description of the burner ... 6
3.1 Burner designation ... 6
3.2 Models available ... 6
3.3 Burner categories - Countries of destination ... 6
3.4 Technical data ... 7
3.5 Maximum dimensions ... 7
3.6 Firing rate ... 8
3.6.1 Test boiler ... 8
3.6.2 Commercial boilers ... 8
3.7 Correlation between gas pressure and burner output ... 8
3.8 Burner description ... 9
3.9 Burner equipment ... 9
3.10 Control box (RMG88.62C2) ... 10
3.11 Air damper servomotor ... 11

4 Installation ... 12
4.1 Notes on safety for the installation ... 12
4.2 Instructions to avoid burnout or bad combustion of the burner ... 12
4.3 Handling ... 12
4.4 Preliminary checks ... 13
4.4.1 Control of the supply ... 13
4.4.2 Control of burner characteristics ... 13
4.5 Operating position ... 13
4.6 Securing the burner to the boiler ... 14
4.6.1 Hinge installation ... 14
4.7 Positioning the probe - electrode ... 14
4.8 Combustion head adjustment ... 15
4.9 Air damper servomotor adjustment ... 15
4.10 Gas feeding ... 16
4.10.1 Gas feeding line ... 16
4.10.2 Gas train ... 17
4.11 Gas train installation ... 17
4.12 Electrical wiring ... 18
4.12.1 Notes on safety for the electrical wiring ... 18
4.12.2 Standard wiring diagram ... 19
4.12.3 Electrical wiring with valve seal control (DUNGS VPS 504) ... 20
4.12.4 Ionisation current ... 20

5 Start-up, calibration and operation of the burner ... 21
5.1 Notes on safety for the first start-up ... 21
5.2 Adjustments prior to ignition ... 21
5.3 Combustion adjustment ... 21
5.4 Air pressure switch ... 21
5.5 Operation sequence of the burner ... 22
5.5.1 Start-up programme visual diagnostics ... 22
5.5.2 Normal operation / flame detection time ... 22

6 Maintenance ... 23
6.1 Notes on safety for the maintenance ... 23
6.2 Maintenance programme ... 23
6.2.1 Maintenance frequency ... 23
6.2.2 Safety test - with gas ball valve closed ... 23
6.2.3 Checking and cleaning ... 23

6.2.4 Safety components 24
6.3 Opening the burner 25

7 Faults - Possible causes - Solutions 26
7.1 Tracing the causes of the malfunctioning 26
7.1.1 Control box reset 26
7.1.2 Visual diagnostics 26
7.1.3 Software diagnostics 26

A Appendix - Accessories 30

1 Information and general warnings

1.1 Information about the instruction manual

1.1.1 Introduction

The instruction manual supplied with the burner:

- ➤ is an integral and essential part of the product and must not be separated from it; it must therefore be kept carefully for any necessary consultation and must accompany the burner even if it is transferred to another owner or user, or to another system. If the manual is lost or damaged, another copy must be requested from the Technical Assistance Service of the area;
- ➤ is designed for use by qualified personnel;
- ➤ offers important indications and instructions relating to the installation safety, start-up, use and maintenance of the burner.

Symbols used in the manual

In some parts of the manual you will see triangular DANGER signs. Pay great attention to these, as they indicate a situation of potential danger.

1.1.2 General dangers

The **dangers** can be of **3 levels**, as indicated below.

Maximum danger level!
This symbol indicates operations which, if not carried out correctly, cause serious injury, death or long-term health risks.

This symbol indicates operations which, if not carried out correctly, may cause serious injury, death or long-term health risks.

This symbol indicates operations which, if not carried out correctly, may cause damage to the machine and/or injury to people.

1.1.3 Other symbols

DANGER: LIVE COMPONENTS

This symbol indicates operations which, if not carried out correctly, lead to electric shocks with lethal consequences.

DANGER: FLAMMABLE MATERIAL

This symbol indicates the presence of flammable materials.

DANGER: BURNING

This symbol indicates the risks of burns due to high temperatures.

DANGER: CRUSHING OF LIMBS

This symbol indicates the presence of moving parts: danger of crushing of limbs.

WARNING: MOVING PARTS

This symbol indicates that you must keep limbs away from moving mechanical parts; danger of crushing.

DANGER: EXPLOSION

This symbol signals places where an explosive atmosphere may be present. An explosive atmosphere is defined as a mixture - under atmospheric conditions - of air and flammable substances in the form of gases, vapours, mist or dust in which, after ignition has occurred, combustion spreads to the entire unburned mixture.

PERSONAL PROTECTION EQUIPMENT

These symbols indicate the equipment that must be worn and kept by the operator for protection against threats against safety and/or health while at work.

OBLIGATION TO ASSEMBLE THE COVER AND ALL THE SAFETY AND PROTECTION DEVICES

This symbol signals the obligation to reassemble the cover and all the safety and protection devices of the burner after any maintenance, cleaning or checking operations.

ENVIRONMENTAL PROTECTION

This symbol gives indications for the use of the machine with respect for the environment.

IMPORTANT INFORMATION

This symbol indicates important information that you must bear in mind.

➤ This symbol indicates a list.

Abbreviations used

Ch.	Chapter
Fig.	Figure
Pag.	Page
Sec.	Section
Tab.	Table

1.1.4 Delivery of the system and the instruction manual

When the system is delivered, it is important that:

➤ the instruction manual is delivered to the user by the system manufacturer, with the recommendation to keep it in the room where the heat generator is to be installed.

➤ The instruction manual shows:
- the serial number of the burner;

  .....

- the address and telephone number of the nearest Assistance Centre;

  .....
  .....
  .....

➤ The system supplier must carefully inform the user about:
- the use of the system;
- any further tests that may be required before activating the system;
- maintenance, and the need to have the system checked at least once a year by a representative of the manufacturer or another specialised technician.
  To ensure a periodic check, the manufacturer recommends the drawing up of a Maintenance Contract.

1.2 Guarantee and responsibility

The manufacturer guarantees its new products from the date of installation, in accordance with the regulations in force and/or the sales contract. At the moment of the first start-up, check that the burner is integral and complete.

WARNING

Failure to observe the information given in this manual, operating negligence, incorrect installation and carrying out of non authorised modifications will result in the annulment by the manufacturer of the guarantee that it supplies with the burner.

In particular, the rights to the guarantee and the responsibility will no longer be valid, in the event of damage to things or injury to people, if such damage/injury was due to any of the following causes:

➤ incorrect installation, start-up, use and maintenance of the burner;
➤ improper, incorrect or unreasonable use of the burner;
➤ intervention of unqualified personnel;
➤ carrying out of unauthorised modifications on the equipment;
➤ use of the burner with safety devices that are faulty, incorrectly applied and/or not working;
➤ installation of untested supplementary components on the burner;
➤ powering of the burner with unsuitable fuels;
➤ faults in the fuel supply system;
➤ continuation of use of the burner when a fault has occurred;
➤ repairs and/or overhauls incorrectly carried out;
➤ modification of the combustion chamber with inserts that prevent the regular development of the structurally established flame;
➤ insufficient and inappropriate surveillance and care of those burner components most likely to be subject to wear and tear;
➤ use of non-original components, including spare parts, kits, accessories and optional;
➤ force majeure.

The manufacturer furthermore declines any and every responsibility for the failure to observe the contents of this manual.

2 Safety and prevention

2.1 Introduction

The burners have been designed and built in compliance with current regulations and directives, applying the known technical rules of safety and envisaging all the potential danger situations.

It is necessary, however, to bear in mind that the imprudent and clumsy use of the equipment may lead to situations of death risk for the user or third parties, as well as the damaging of the burner or other items. Inattention, thoughtlessness and excessive confidence often cause accidents; the same applies to tiredness and sleepiness.

It is a good idea to remember the following:

➤ The burner must only be used as expressly described. Any other use should be considered improper and therefore dangerous.

In particular:

it can be applied to boilers operating with water, steam, diathermic oil, and to other uses expressly foreseen by the manufacturer;

the type and pressure of the fuel, the voltage and frequency of the electrical power supply, the minimum and maximum deliveries for which the burner has been regulated, the pressurisation of the combustion chamber, the dimensions of the combustion chamber and the room temperature must all be within the values indicated in the instruction manual.

➤ Modification of the burner to alter its performance and destinations is not allowed.

➤ The burner must be used in exemplary technical safety conditions. Any disturbances that could compromise safety must be quickly eliminated.

➤ Opening or tampering with the burner components is not allowed, apart from the parts requiring maintenance.

➤ Only those parts envisaged by the manufacturer can be replaced.

The manufacturer guarantees safety and proper functioning only if all burner components are intact and positioned correctly.

2.2 Personnel training

The user is the person, body or company that has acquired the machine and intends to use it for the specific purpose. He is responsible for the machine and for the training of the people working around it.

The user:

➤ undertakes to entrust the machine exclusively to suitably trained and qualified personnel;

➤ undertakes to inform his personnel in a suitable way about the application and observance of the safety instructions. With that aim, he undertakes to ensure that everyone knows the use and safety instructions for his own duties.

➤ Personnel must observe all the danger and caution indications shown on the machine.

➤ Personnel must not carry out, on their own initiative, operations or interventions that are not within their province.

➤ Personnel must inform their superiors of every problem or dangerous situation that may arise.

➤ The assembly of parts of other makes, or any modifications, can alter the characteristics of the machine and hence compromise operating safety. The manufacturer therefore declines any and every responsibility for any damage that may be caused by the use of non-original parts.

In addition:

➤ must take all the measures necessary to prevent unauthorised people gaining access to the machine;

➤ the user must inform the manufacturer if faults or malfunctioning of the accident prevention systems are noticed, along with any presumed danger situation;

➤ personnel must always use the personal protective equipment envisaged by legislation and follow the indications given in this manual.

3 Technical description of the burner

3.1 Burner designation

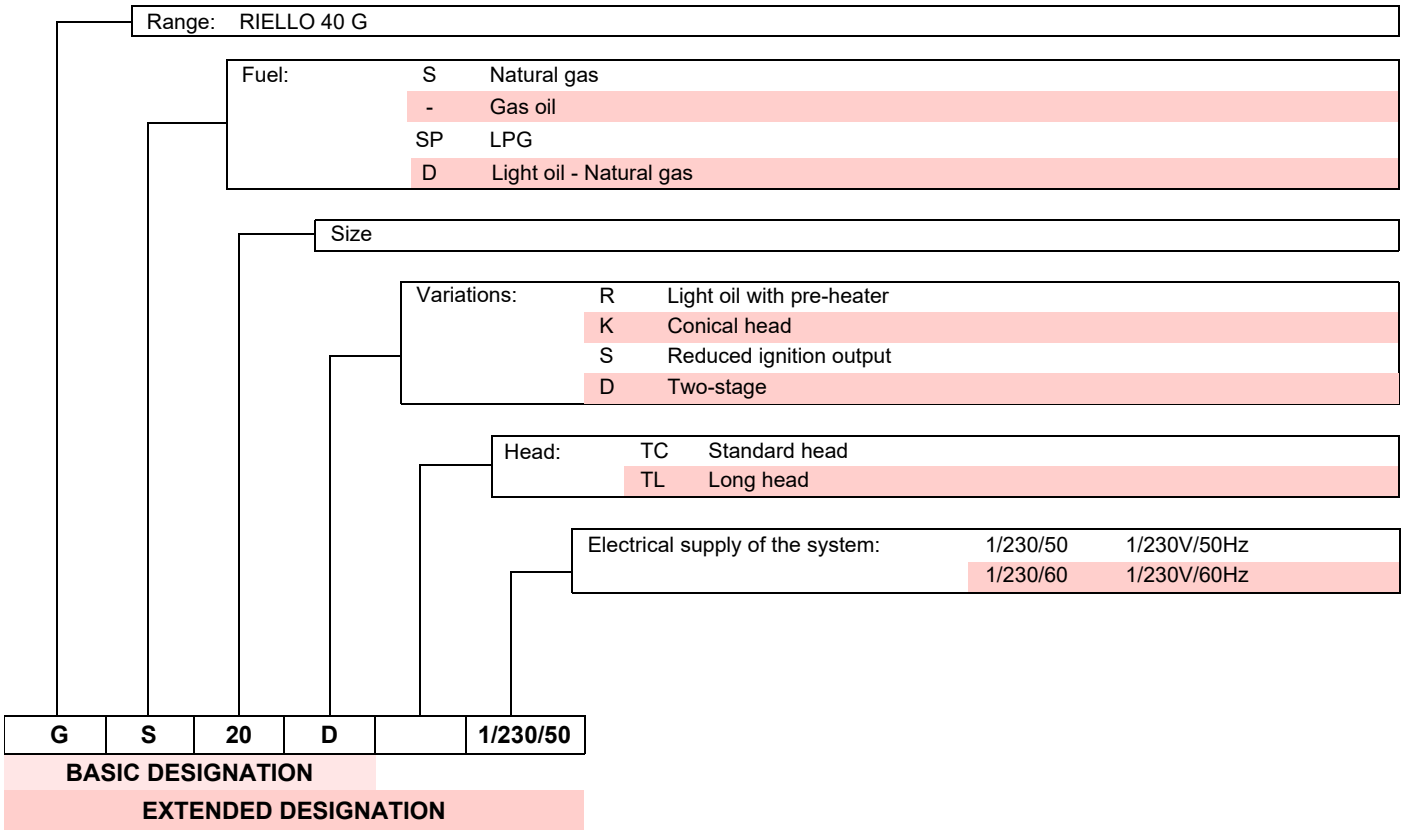

3.2 Models available

Designation	Voltage	Code
RIELLO 40 GS20D	1/230/50	3757714

Tab. A

3.3 Burner categories - Countries of destination

Country of destination	Gas category
SE - FI - AT - GR - DK - ES - GB - IT - IE - PT - IS - CH - NO	I_{2H}
DE	I_{2ELL}
NL	I_{2L} - I_{2E} - I_2 (43,46 ÷ 45,3 MJ/m^3 (0°C))
FR	I_{2Er}
BE	$I_{2E(R)B}$
LU - PL	I_{2E}

Tab. B

3.4 Technical data

Model			RIELLO 40 GS20D
Type			577T1
Heat output (Hi) (1)	min - max	kW kcal/h	58/81 ÷ 220 50,000/70,000 ÷ 189,000
Fuel		Family 2	NCV 8 ÷ 12 kWh/m^3 – 7,000 ÷ 10,340 kcal/m^3 Pressure: min. 25 mbar – max. 360 mbar
Operation			Intermittent (FS1)
Use			Boilers: water and diathermic oil
Ambient temperature		°C	0 - 50
Combustion air temperature		°C max	60
Electrical supply			1/230V/50Hz
Fan motor		rpm - rad/s V - Hz W A	2750 - 288 230 - 50 150 1.3
Ignition transformer			Primary 230V / 1.8A - Secondary 8 kV / 30 mA
Capacitor		µF	5
Absorbed electrical power		kW	0.25
Protection level			IP40
Weight		kg	21
Noise levels (2)	Sound pressure Sound power	dB(A)	66.8 77.8
CE		No.	CE-0476CT2714

Tab. C

(1) Reference conditions: Room temperature 20°C - Gas temperature 15°C - Barometric pressure 1013 mbar - Altitude 0 m a.s.l.

(2) Sound pressure measured in manufacturer's combustion laboratory, with burner operating on test boiler and at maximum rated output. The sound power is measured with the “Free Field” method, as per EN 15036, and according to an “Accuracy: Category 3” measuring accuracy, as set out in EN ISO 3746.

3.5 Maximum dimensions

The maximum dimensions of the flange and burner are given in Fig. 1.

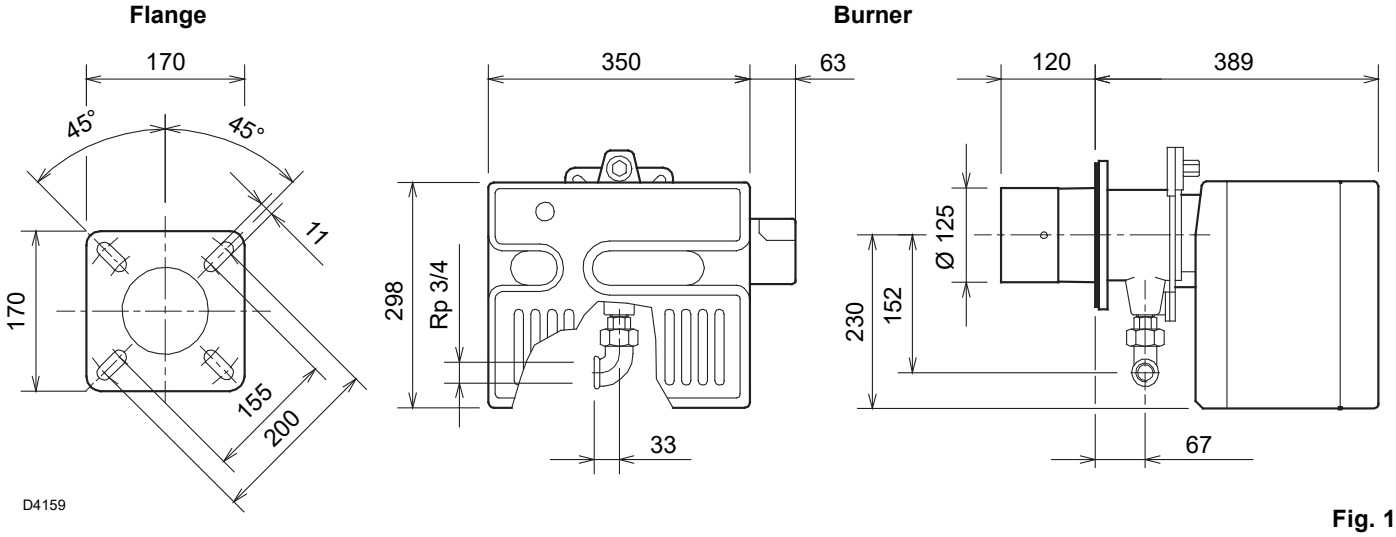

Fig. 1

3.6 Firing rate

The burner output is chosen from within the diagram area (Fig. 2).

WARNING

The firing rate value (Fig. 2) has been obtained considering an ambient temperature of 20°C, an atmospheric pressure of 1013 mbar (approx. 0m above sea level), and with the combustion head adjusted as shown on page 15.

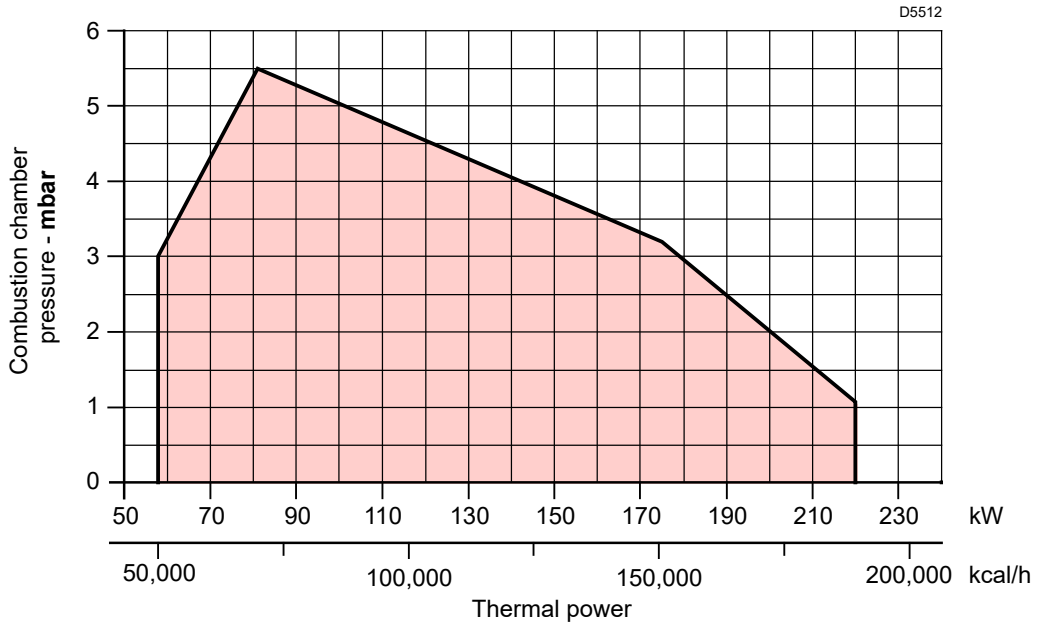

Fig. 2

3.6.1 Test boiler

The firing rate has been defined according to EN 676 standard.

For applications where the boiler does not conform to EN 303, or where the combustion chamber is much smaller than the dimensions given in EN 676, please consult the manufacturers.

3.6.2 Commercial boilers

The burner-boiler matching is assured if the boiler conforms to EN 303 and the combustion chamber dimensions are similar to those shown in the diagram EN 676.

3.7 Correlation between gas pressure and burner output

To obtain the maximum burner output (Fig. 3), 5.9 mbar measured at the pipe coupling are needed (M2, Fig. 16 on page 16) with the combustion chamber at 0 mbar and gas G20 - Ncv = 10 kWh/Nm^3 (8,570 kcal/Nm^3).

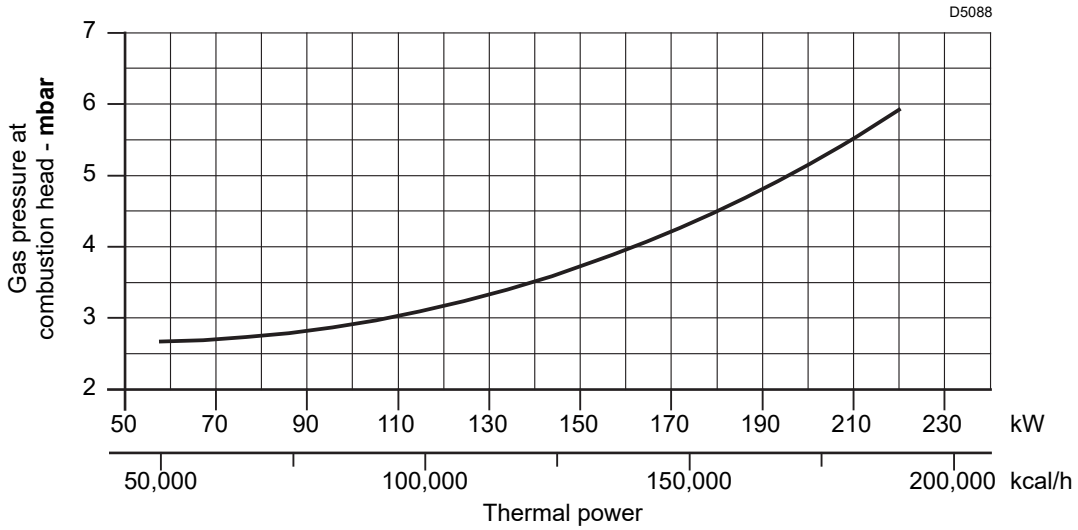

Fig. 3

3.8 Burner description

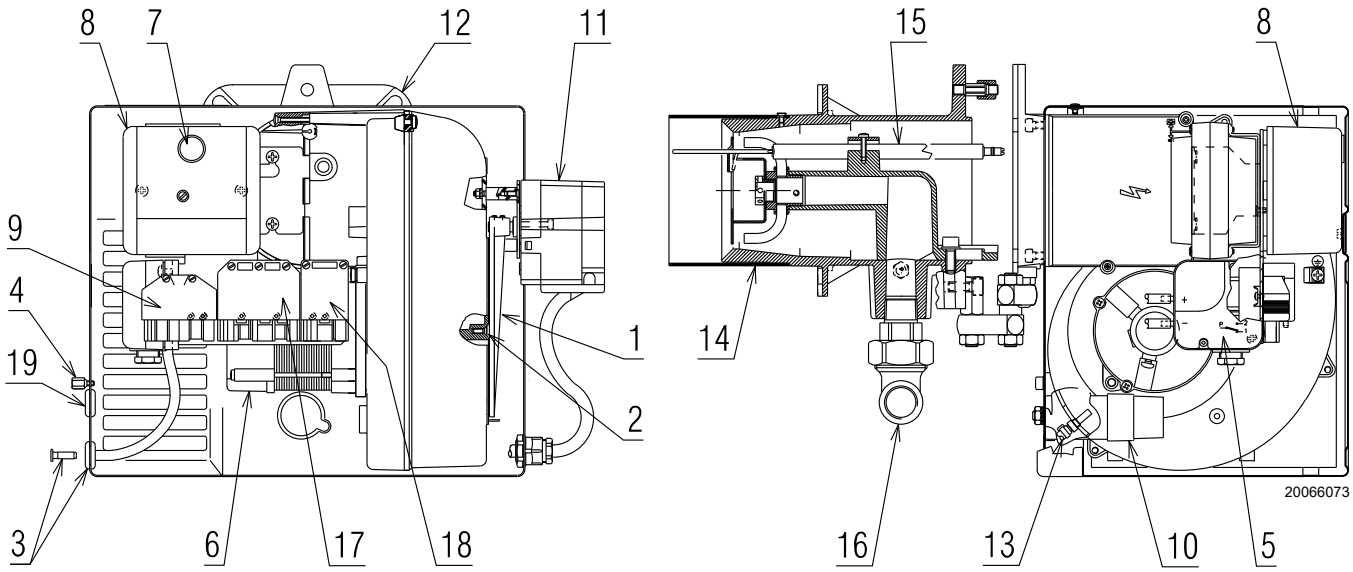

Fig. 4

1 Air dampers
2 Damper fixing screws
3 Pressure test point (-)
4 Cover fixing screw
5 Air pressure switch
6 Motor
7 Lock-out signal with reset button
8 Control box
9 6 pole socket for gas train
10 Capacitor
11 Air damper servomotor
12 Flange
13 Pressure test point (+)
14 Combustion head
15 Electrode-probe
16 Gas train elbow
17 7-pole socket for electrical wiring and control box
18 4-pole socket for 2nd stage
19 Grommet

WARNING

The supplied grommet and the cover fixing screws should be assembled on the same side as the gas train.

3.9 Burner equipment

Flange screws and nuts for boiler fixing . . . . . No. 4
Insulating gasket . . . . . No. 1
Cover fixing screw . . . . . No. 3
Cable grommet. . . . . No. 1
Hinge . . . . . No. 1
4-pin plug . . . . . No. 1
7-pin plug . . . . . No. 1
Instructions . . . . . No. 6
Spare parts list . . . . . No. 1

3.10 Control box (RMG88.62C2)

Warnings

To avoid accidents, material or environmental damage, observe the following instructions!

The control box is a safety device! Avoid opening or modifying it, or forcing its operation. Riello S.p.A. cannot assume any responsibility for damage resulting from unauthorised interventions!

➤ All interventions (assembly and installation operations, assistance, etc.) must be carried out by qualified personnel.
➤ Before modifying the wiring in the control box connection area, fully disconnect the system from the power supply (omnipolar separation).
➤ Protection against electrocution from the control box and all connected electric components is obtained with the correct assembly.
➤ Before any intervention (assembly and installation operations, assistance, etc.), ensure the wiring is in order and that the parameters are correctly set, then make the safety checks.
➤ Falls and collisions can negatively affect the safety functions. In this case, the control box must not be operated, even if it displays no evident damage.

For safety and reliability, comply with the following instructions:
– avoid conditions that can favour the development of condensate and humidity. Otherwise, before switching on again, make sure the control box is perfectly dry.
– Static charges must be avoided since they can damage the control box's electronic components when touched.

Use

The control box is a control and supervision system of medium and large capacity forced draught burners, for intermittent operation (at least one controlled shutdown every 24 hours).

Installation notes

- Check the electric wiring inside the boiler complies with the national and local safety regulations.
- Install switches, fuses, earth connection etc. in compliance with local regulations.
- Do not confuse the powered conductors with the neutral ones.
- Ensure that spliced wires cannot get into contact with neighbouring terminals. Use adequate ferrules.
- Arrange the H.V. ignition cables separately, as far as possible from the control box and the other cables.
- When wiring the unit, make sure the 230V AC mains voltage cables are run strictly separate from extra low-voltage cables, to avoid the risk of electrocution.

Fig. 5

Electrical wiring of the flame detector

It is important for signal transmission to be almost totally free of any disturbances or loss:
- Always separate the detector cables from the other cables:
  – the line capacity reduces the magnitude of the flame signal;
  – use a separate cable.
- The cable length must not exceed 1m.
- Respect the polarity
- Insulation resistance:
  – must be at least 50MΩ between the ionisation probe and the earth;
  – a dirty detector reduces the insulation resistance, fostering leakage currents.
- The ionisation probe is not protected against the risk of electrocution. When connected to the electricity supply, the ionisation probe must be protected against any accidental contact.
- Position the ionisation probe so that the ignition spark cannot form an arc on the probe (risk of electric overcharge).

Technical data

Mains voltage	AC 230V -15% / +10%
Mains frequency	50/60 Hz ±6%
Built-in fuse	T6.3H 250V
Energy consumption	20 VA
Weight	approx. 260g
Protection level	IP20
Safety class	I
Tightening torque of M4 screw	Max. 0,8 Nm
Allowed cable length	
Thermostat	max. 20 m at 100 pF/m
Air pressure switch	max. 1 m at 100 pF/m
CPI	max. 1 m at 100 pF/m
Gas pressure switch	max. 20 m at 100 pF/m
Flame detector	max. 1 m
Remote reset	max. 20 m at 100 pF/m
Environmental conditions	
Storage	DIN EN 60721-3-1
Climatic conditions	Class 1K3
Mechanical conditions	Class 1M2
Temperature range	-20...+60°C
Humidity	< 95% RH

Tab. D

3.11 Air damper servomotor

Warnings

To avoid accidents, material or environmental damage, observe the following instructions!

Avoid opening, modifying or forcing the actuators.

- ➤ All interventions (assembly and installation operations, assistance, etc.) must be carried out by qualified personnel.
- ➤ Before modifying the wiring in the connection area or the actuator, fully disconnect the burner control device from the power supply (omnipolar separation).
- ➤ To avoid the risk of electrocution, protect the connection terminals in a suitable manner and correctly fix the cover.
- ➤ Check the wiring is in order.
- ➤ Falls and collisions can negatively affect the safety functions. In this case, the servomotor must not be operated, even if it displays no evident damage.

Assembly notes

- Check the relevant national safety standards are respected.

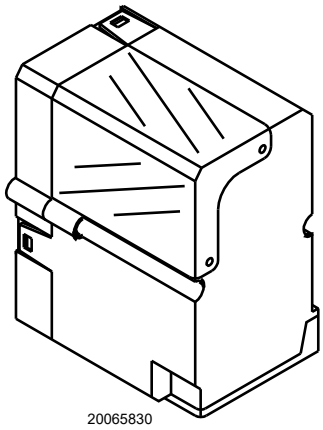

Fig. 6

Technical characteristics

Voltage and frequency	230V - 50Hz
Rotation time	13s. 0° - 90°
Output	4W
Ambient temperature	-40 +60 °C
Electric load	16(A) (4), 250V
Protection level	IP40

Tab. E

4 Installation

4.1 Notes on safety for the installation

After carefully cleaning all around the area where the burner will be installed, and arranging the correct lighting of the environment, proceed with the installation operations.

All the installation, maintenance and disassembly operations must be carried out with the electricity supply disconnected.

The installation of the burner must be carried out by qualified personnel, as indicated in this manual and in compliance with the standards and regulations of the laws in force.

Combustion air inside the boiler must be free from hazardous mixes (e.g.: chloride, fluoride, halogen); if present, it is highly recommended to carry out cleaning and maintenance more frequently.

4.2 Instructions to avoid burnout or bad combustion of the burner

1 The burner can not be installed outside as it is suitable for operation in closed rooms only.
2 The premises the burner operates in must have openings for the air need for the combustion.
To be sure about this, you have to control CO_2 and CO in the exhaust gases with all the windows and doors closed.
3 If there are air extractors in the premises the burner works, make sure that there are openings for air to be taken in that are big enough to ensure the required air change; In any case, check that when the burner stops the extractors do not draw hot fumes from pipes through the burner.
4 When the burner is stopped, the smoke pipe must be kept open and a natural draft created in the combustion chamber. If the smoke pipe is closed, the burner must be drawn back till the extraction of blast tube from the furnace. Before operating in this way take the voltage off.

4.3 Handling

The transport weight is given in chapter “Technical data” on page 7.

Observe the permissible ambient temperatures for storage and transport: -20 ..... + 70 °C, with max. relative humidity. 80%.

After positioning the burner near the installation point, correctly dispose of all residual packaging, separating the various types of material.

Before proceeding with the installation operations, carefully clean all around the area where the burner will be installed.

The operator must use the required equipment during installation.

4.4 Preliminary checks

4.4.1 Control of the supply

CAUTION

After removing all the packaging, check the integrity of the contents.

In the event of doubt, do not use the burner; contact the supplier.

The packaging elements (cardboard box, clips, plastic bags, etc.) must not be abandoned as they are potential sources of danger and pollution; they should be collected and disposed of in the appropriate places.

4.4.2 Control of burner characteristics

Check the identification label of the burner (Fig. 7), showing:

A the burner model
B the burner type
C the cryptographic year of manufacture
D the serial number
E the data for electrical supply and the protection level
F the electrical power consumption
G the data of the burner's minimum and maximum output possibilities (see Firing rate)
Warning. The burner output must be within the boiler's firing rate.

WARNING

A burner label that has been tampered with, removed or is missing, along with anything else that prevents the definite identification of the burner makes any installation or maintenance work difficult.

WARNING

The figure of the label (Fig. 7) is indicative. Some of the data may be arranged in a different position.

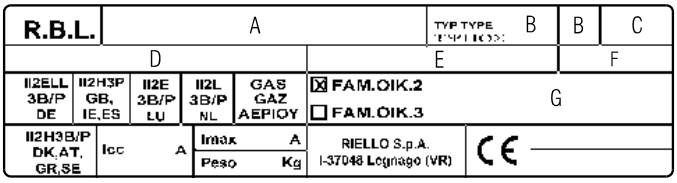

20065195

Fig. 7

4.5 Operating position

WARNING

- ➤ The burner is designed to operate only in positions **1**, **2**, **3** and **4** (Fig. 8).
- ➤ Installation **1** is preferable, as it is the only one that allows the maintenance operations as described in this manual.
- ➤ Installations **2**, **3** and **4** permit operation but make maintenance and inspection of the combustion head more difficult.

DANGER

- ➤ Any other position could compromise the correct operation of the appliance.
- ➤ Installation **5** is prohibited for safety reasons.

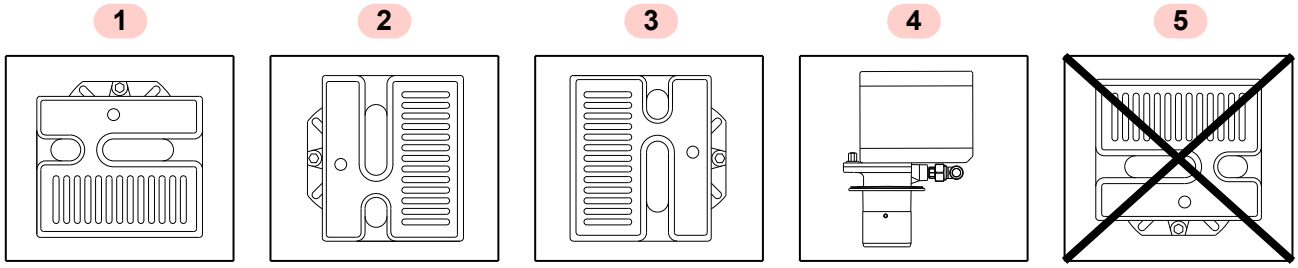

20065196

Fig. 8

4.6 Securing the burner to the boiler

Provide an adequate lifting system of the burner.

WARNING

Boiler door must have a max. thickness of 100 mm, refractory lining included. If the thickness is greater (max. 260 mm) a combustion head extension should be used, to be requested separately.

4.6.1 Hinge installation

Install the hinge 4), supplied as standard, as shown in Fig. 9.

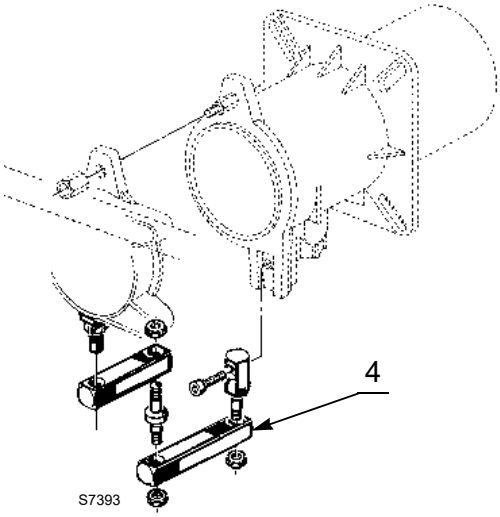

Fig. 9

- ➤ Separate the combustion head assembly from the burner body by removing nut 1) and removing the group A)(Fig. 10).
- ➤ Fix the group B)(Fig. 10) to the boiler plate 2), inserting the supplied insulating gasket 3).

WARNING

The seal between burner and boiler must be airtight.

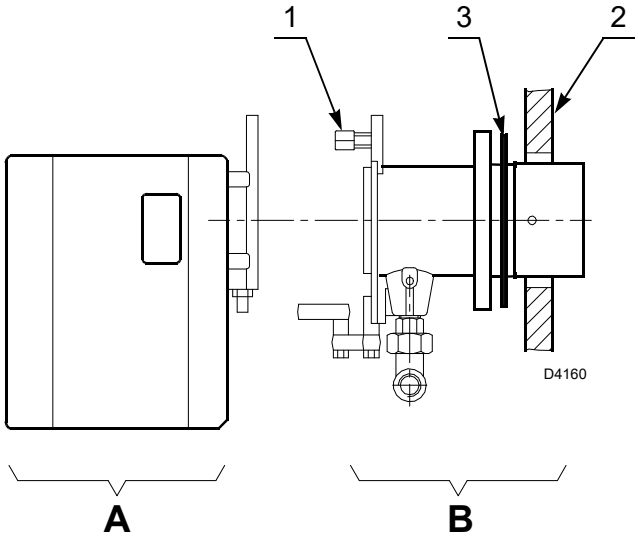

Fig. 10

4.7 Positioning the probe - electrode

WARNING

Respect the positions shown in Fig. 11.

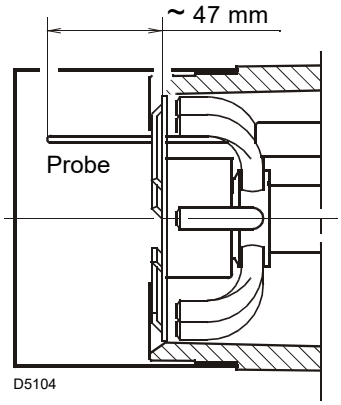

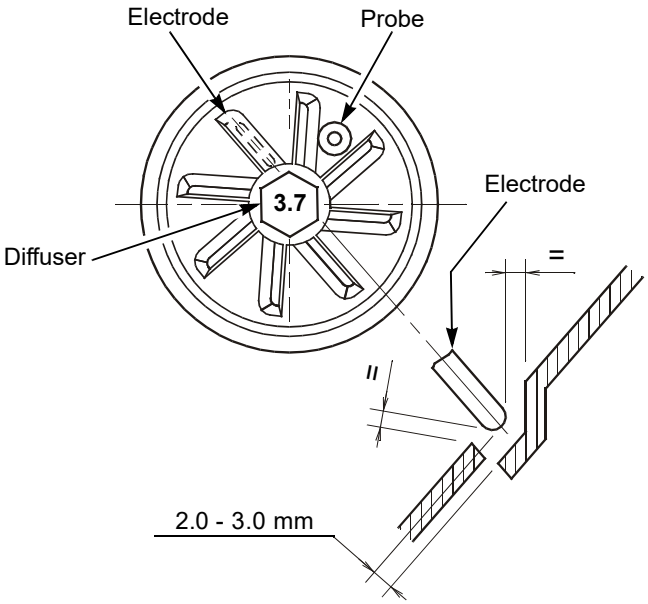

Fig. 11

4.8 Combustion head adjustment

To adjust, proceed as follows:

➤ loosen the screw A)(Fig. 12), move the elbow B) so that the rear plate of the coupling (C) coincides with the set point;

➤ tighten the screw A).

Example:

The burner is installed in a 155 kW boiler.
Considering an efficiency of 90%, the burner must supply around 172 kW.

The diagram (Fig. 13) shows that for this output the adjustment must be made on notch 3.

The diagram is to be used only for initial settings,. To ensure good air pressure switch operation it may be necessary to reduce this combustion head opening (notch toward pos. 0).

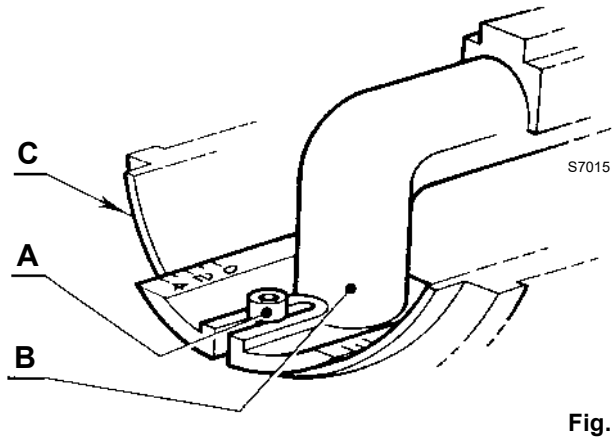

Fig. 12

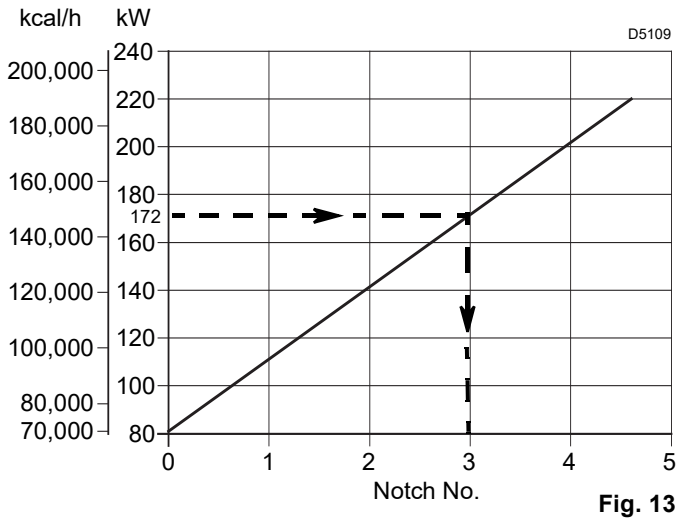

Fig. 13

4.9 Air damper servomotor adjustment

To adjust the servomotor 3)(Fig. 14) proceed as follows:

CAM I STAND-BY

Cam I is adjusted in the factory and corresponds to the air damper being completely closed. (Reference value 0°).

WARNING

Do not tamper with this adjustment for any reason.

CAM V STOP - FIRST STAGE

Cam V adjusts the position of the damper of 1° stage 2)(Fig. 14).

It should be regulated downwards (damper closing) using the micrometric screw (Fig. 15).

The final position is obtained after the adjustment of the 2° stage.

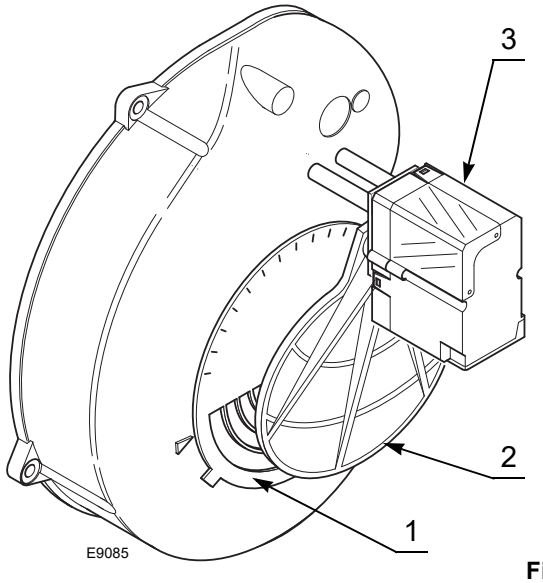

Fig. 14

CAM II SECOND STAGE
Cam II adjusts the position of the 2° stage damper.
(Reference value 60°, do not exceed 70°).

WARNING Do not tamper with this adjustment for any reason.

The adjustment of the 2° stage air is carried out using the damper cover 1)(Fig. 14).

CAM III
Cam III controls the opening of the 2° stage gas valve, it should always anticipate cam II by at least 15°.

WARNING To adjust the burner output of the 1° and 2° stage, respect the following recommendations:
- the burner output ratio between the 1° and 2° stage should be maximum 1 : 2; if this ratio is exceeded the valve seal control will have to be used.
- In any event, the minimum burner output in the 1° stage should not be less than the value indicated in the firing rate.

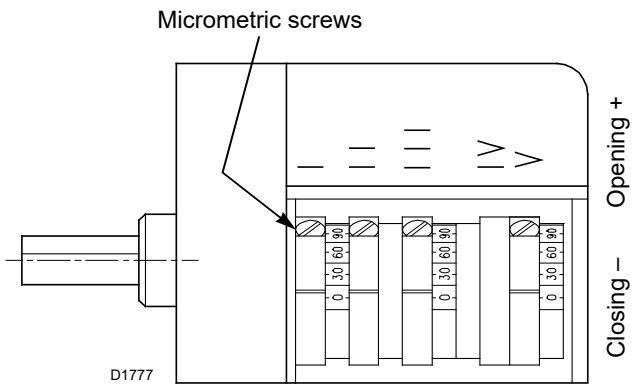

Fig. 15

4.10 Gas feeding

Explosion danger due to fuel leaks in the presence of a flammable source.

Precautions: avoid knocking, attrition, sparks and heat.

Make sure the fuel interception tap is closed before performing any operation on the burner.

WARNING The fuel supply line must be installed by qualified personnel, in compliance with current standards and laws.

4.10.1 Gas feeding line

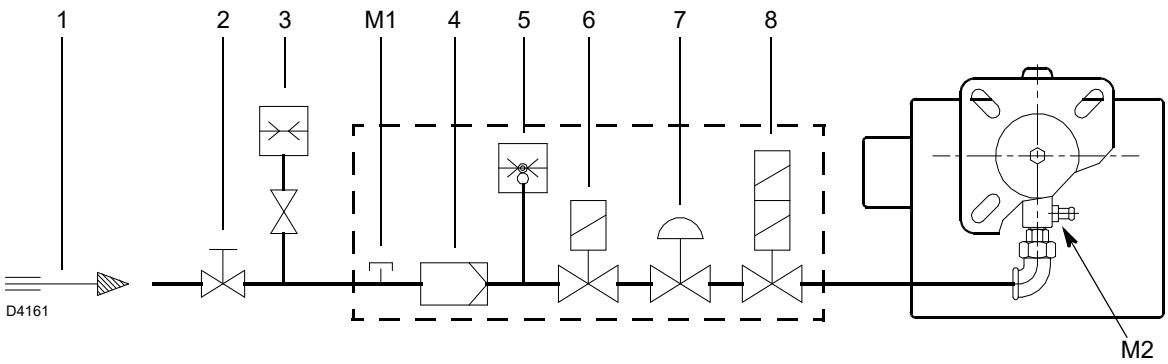

Fig. 16

Key (Fig. 16)
1 Gas input pipe
2 Manual gate (the responsibility of the installer)
3 Gas pressure gauge (the responsibility of the installer)
4 Filter
5 Gas pressure switch
6 Safety valve
7 Pressure stabiliser
8 1st and 2nd stage adjustment valve
M1 Gas-supply pressure test point on the pressure switch
M2 Pressure coupling test point

4.10.2 Gas train

Approved according to standard EN 676 and provided separately from the burner.

Supplied separately for its adjustment, see the enclosed instructions.

The train-burner combination is indicated in Tab. F.

Code	Model	Connections		Use
		Gas train	Burner	
3970537	MB 407/2 - RSD 20	Rp 3/4	Rp 3/4	Natural gas ≤ 180 kW and LPG
3970534	MB 410/2 - RSD 20	Rp 1	Rp 3/4	Natural gas and LPG

Tab. F

4.11 Gas train installation

DANGER

Disconnect the electrical power using the main switch.

Check that there are no gas leaks.

Pay attention when handling the train: danger of crushing of limbs.

Make sure that the gas train is properly installed by checking for any fuel leaks.

The gas train 1) can be installed on both the left side and the right side of the burner.

Connection between the gas supply line and the train must be made using the gas-in flange 3) supplied, and fastening screws.

WARNING

It is best to tighten screws in a criss-cross pattern.

Do not, under any circumstances, install the valve with the coil facing down.

Connect the 6-pin plug 2)(Fig. 17) of the gas train to the 6-pole socket 9)(Fig. 4 on page 9) of the burner.

WARNING

Once installation is complete, you must check for fuel leaks and make sure the gas train is working properly.

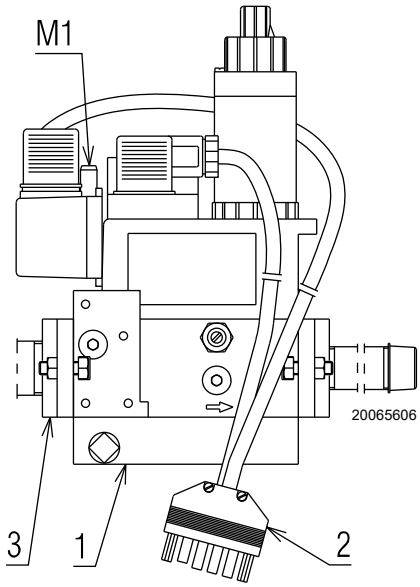

Fig. 17

4.12 Electrical wiring

4.12.1 Notes on safety for the electrical wiring

DANGER

- ➤ The electrical wiring must be carried out with the electrical supply disconnected.
- ➤ Electrical wiring must be made in accordance with the regulations currently in force in the country of destination and by qualified personnel. Refer to the wiring diagrams.
- ➤ The manufacturer declines all responsibility for modifications or connections different from those shown in the wiring diagrams.
- ➤ Check that the electrical supply of the burner corresponds to that shown on the identification label and in this manual.
- ➤ The burner has been type-approved for intermittent use.
  In the event of continuous operation, a cycle arrest must be ensured within 24 hours with the use of a time switch positioned in series with the thermostatic line. Refer to the wiring diagrams.
- ➤ The electrical safety of the device is obtained only when it is correctly connected to an efficient earthing system, made according to current standards. It is necessary to check this fundamental safety requirement. In the event of doubt, have the electrical system checked by qualified personnel. Do not use the gas tubes as an earthing system for electrical devices.
- ➤ The electrical system must be suitable for the maximum power absorption of the device, as indicated on the label and in the manual, checking in particular that the section of the cables is suitable for that level of power absorption.
- ➤ For the main power supply of the device from the electricity mains:
  - do not use adapters, multiple sockets or extensions;
  - use a multiple pole switch with at least a 3mm gap between the contacts (overvoltage category III), as envisaged by the present safety standards.
- ➤ Do not touch the device with wet or damp body parts and/or in bare feet.
- ➤ Do not pull the electric cables.

Before carrying out any maintenance, cleaning or checking operations:

DANGER

Disconnect the electrical supply from the burner by means of the main system switch.

DANGER

Turn off the fuel interception tap.

DANGER

Avoid condensate, ice and water leaks from forming.

If the cover is still present, remove it and proceed with the electrical wiring according to the wiring diagrams.

After carrying out maintenance, cleaning or checking operations, reassemble the cover and all the safety and protection devices of the burner.

4.12.2 Standard wiring diagram

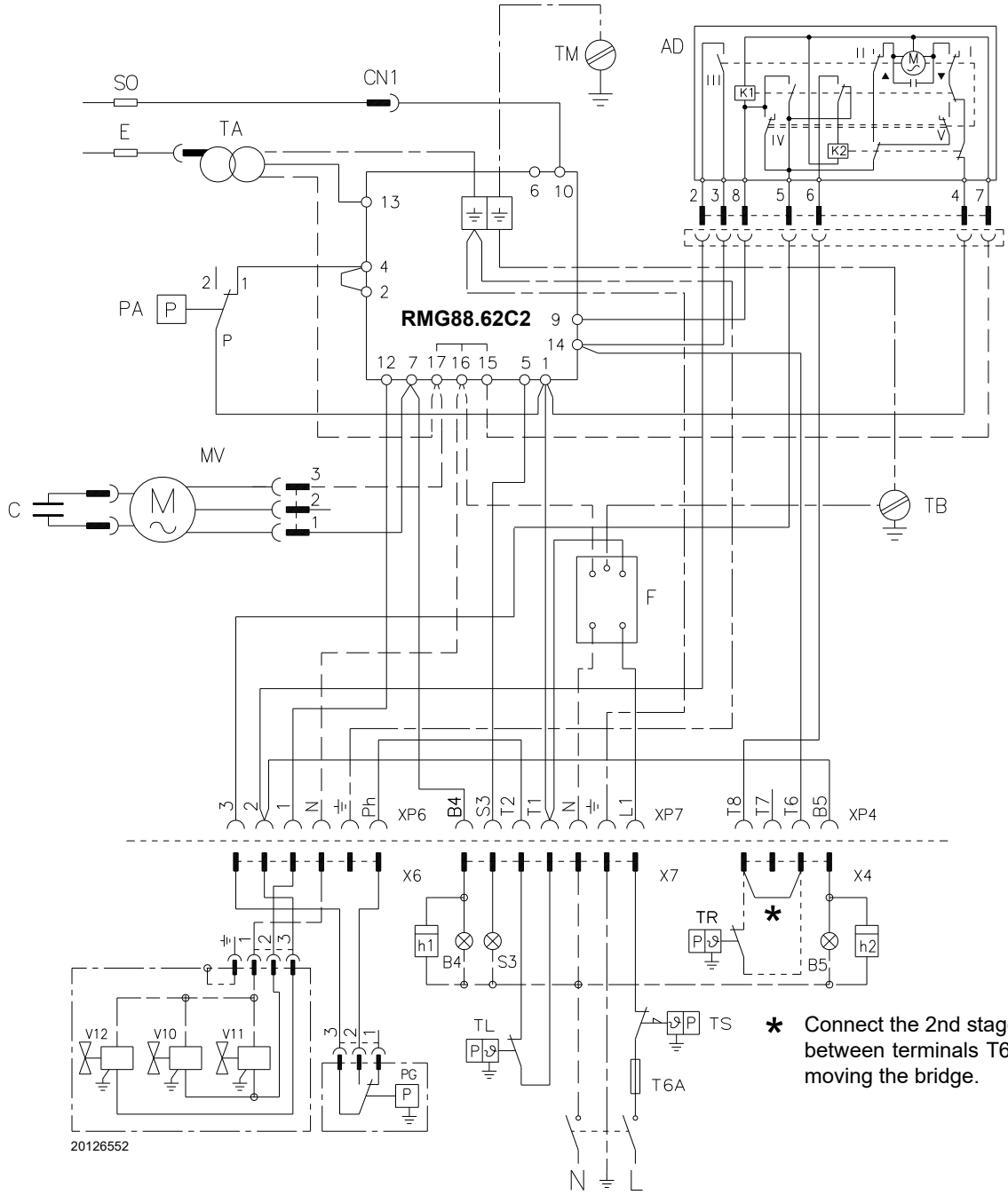

* Connect the 2nd stage thermostat between terminals T6 and T8, removing the bridge.

Fig. 18

Key (Fig. 18)

AD	Air damper servomotor
B4	1st stage operating signal
B5	2nd stage operating signal
C	Motor capacitor
CN1	Ionisation probe connector
E	Ignition electrode
F	Filter
h1	1st stage hour counter
h2	2nd stage hour counter
MV	Fan motor
PA	Air pressure switch
PG	Min. gas pressure switch
S3	Lamp block (230V - 0.5A max.)
SO	Ionisation probe
TA	Ignition transformer
TB	Burner earth
TL	Limit thermostat
TM	Burner shelf
TR	2nd stage thermostat
TS	Safety thermostat
T6A	Fuse
V10	Safety valve
V11	1st stage valve
V11	2nd stage valve
XP4	4-pole socket
XP6	6- pole socket
XP7	7-pole socket
X4	4-pin plug
X6	6 pin plug
X7	7 pin plug

WARNING In the event of phase-phase power supply, a bridge should be installed on the terminal board of the control box between clamp 6 and the earth clamp.

4.12.3 Electrical wiring with valve seal control (DUNGS VPS 504)

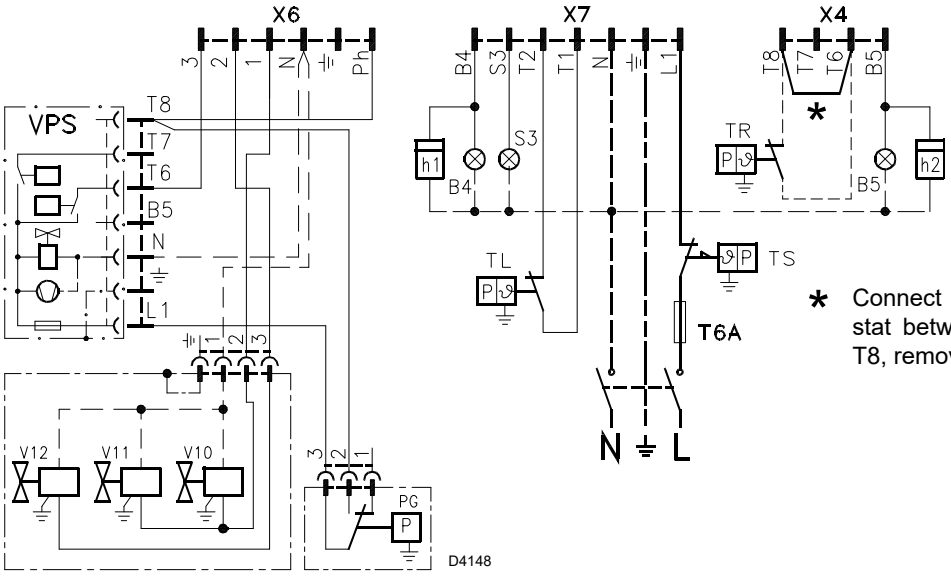

* Connect the 2nd stage thermostat between terminals T6 and T8, removing the bridge.

Fig. 19

Key (Fig. 19)

B4	1st stage operating signal
B5	2nd stage operating signal
h1	1st stage hour counter
h2	2nd stage hour counter
PG	Min. gas pressure switch
S3	Remote lock-out signal (230V - 0.5A max.)
T6A	Fuse
TL	Limit thermostat
TR	2nd stage thermostat
TS	Safety thermostat
VPS	Valve leak detection control
V10	Safety valve
V11	1st stage valve
V11	2nd stage valve
X4	4-pin plug
X6	6 pin plug
X7	7 pin plug

4.12.4 Ionisation current

The minimum current necessary for the control box operation is 3 µA. The burner normally supplies a higher current value, so that no control is needed. Anyway, if you want to measure the ionisation current, you need to open the connector (CN1)(Fig. 18) on the red wire and insert a microammeter as shown in Fig. 20.

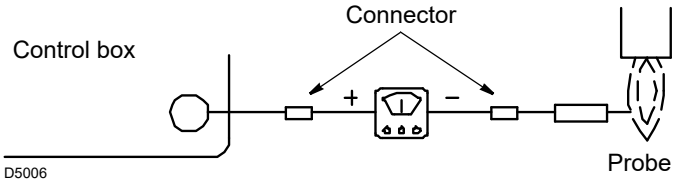

Fig. 20

5 Start-up, calibration and operation of the burner

5.1 Notes on safety for the first start-up

WARNING

The first start-up of the burner must be carried out by qualified personnel, as indicated in this manual and in compliance with the standards and regulations of the laws in force.

WARNING

Check the correct working of the adjustment, command and safety devices.

WARNING

Refer to paragraph "Safety test - with gas ball valve closed" on page 23 before the first start-up.

5.2 Adjustments prior to ignition

- ➤ Check the adjustment of the head as shown in page 15.
- ➤ Check the adjustment of the air dampers as shown in page 11.
- ➤ Slowly open the manual valves situated upstream from the gas train.
- ➤ Adjust the air pressure switch (Fig. 21) to the start of the scale.
- ➤ Purge the air from the gas line.
  We recommend using a plastic tube routed outside the building and to purge air until gas is smelt.

CAUTION

Before starting up the burner, it is good practice to adjust the gas train so that ignition takes place in conditions of maximum safety, i.e. with gas delivery at the minimum.

5.3 Combustion adjustment

In conformity with EN 676 the application of the burner on the boiler, adjustment and testing must be carried out observing the instruction manual of the boiler, including verification of the CO and CO2 concentration in the flue gases, their temperatures and the average temperature of the water in the boiler.

It is advisable to set the burner according to the type of gas used and following the indications in Tab. G.

EN 676		Air excess: max. output. $\lambda \leq 1.2$ – min. output $\lambda \leq 1.3$			
GAS	Theoretical max CO2 0 % O2	Setting CO2 %		CO mg/kWh	NOx mg/kWh
		$\lambda = 1.2$	$\lambda = 1.3$		
G 20	11.7	9.7	9.0	≤ 100	≤ 170
G 25	11.5	9.5	8.8	≤ 100	≤ 170
G 30	14.0	11.6	10.7	≤ 100	≤ 230
G 31	13.7	11.4	10.5	≤ 100	≤ 230

Tab. G

5.4 Air pressure switch

Adjust the air pressure switch (Fig. 21) after performing all other burner adjustments with the air pressure switch set to the start of the scale.

With the burner operating at minimum output, turn the knob counter-clockwise, increasing its value until the burner switches off.

Then turn the knob anticlockwise to an extent that is around 20% of the adjusted value and then check that the burner starts up properly. If the burner locks out again turn the knob slightly in an anticlockwise direction.

WARNING

In conformity with the standard, the air pressure switch must prevent the air pressure falling below 80% of the adjusted value and the CO in the flue gases exceeding 1% (10,000 ppm).

To check this, insert a combustion analyser in the flue, slowly reduce the burner air setting (for example with a piece of cardboard) and verify that the burner locks out before the CO value in the flue gases exceeds 1%.

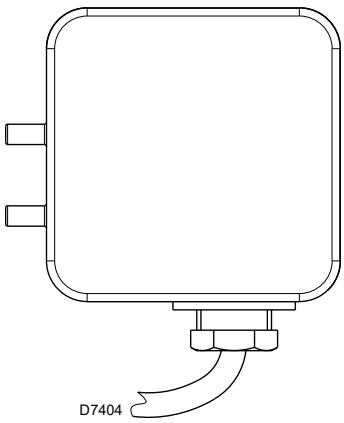

Fig. 21

5.5 Operation sequence of the burner

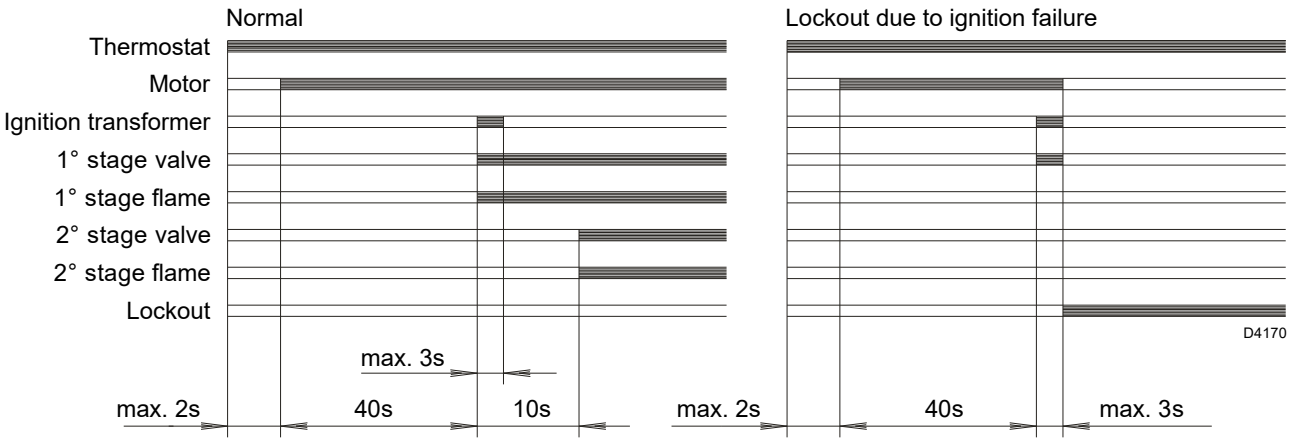

Fig. 22

If the flame goes out while running, the burner goes into lockout within 1 second.

5.5.1 Start-up programme visual diagnostics

When operating normally, the various operating statuses can be see on the control box's LED (reset button) indicated in the form of a colour code (Tab. H).

Sequences	Colour code	Colour
Pre-purge	● ● ● ● ● ●	Yellow
Ignition phase	● ○ ● ○ ● ○	Yellow - Off
Operation, flame OK	■ ■ ■ ■ ■ ■	Green
Operation with weak flame signal	■ ○ ■ ○ ■ ○	Green - On
Electrical supply below ~ 170V	● ▲ ● ▲ ● ▲	Yellow - Red
Lockout	▲ ▲ ▲ ▲ ▲ ▲	Red
Extraneous light	▲ ■ ▲ ■ ▲ ■	Red - Green

Tab. H

5.5.2 Normal operation / flame detection time

The control box has a function through which it is possible to ascertain the correct functioning of the burner (signal: **GREEN LED** permanently on).

To use this function, it is necessary to wait at least 10s. from the time the burner switches on and press the button on the control box for at least 3 seconds.

Once the button is released, the GREEN LED starts to flash, as shown in Tab. I.
The pulses of the LED constitute a signal spaced by approximately 3 seconds.

The number of pulses will measure the probe detection time since the opening of gas valves, according to: Tab. J.

This is updated in every burner start-up.

Once read, the burner repeats the start-up cycle by briefly pressing the control box button.

If the result is > 2 s, ignition will be retarded. Then check the adjustment of the hydraulic brake on the gas valve, the adjustment of the air damper and the combustion head.

GREEN LED ON wait at least 10s	Press the button for > 3s	Signal	3s interval	Signal
		● ● ● ● ● ●		● ● ● ● ● ●

Tab. I

Signal	Flame detection time
1 blink	0.4 s
2 blinks	0.8 s
6 blinks	2.8 s

Tab. J

6 Maintenance

6.1 Notes on safety for the maintenance

The periodic maintenance is essential for the good operation, safety, yield and duration of the burner.

It allows you to reduce consumption and polluting emissions and to keep the product in a reliable state over time.

DANGER

The maintenance interventions and the calibration of the burner must only be carried out by qualified, authorised personnel, in accordance with the contents of this manual and in compliance with the standards and regulations of current laws.

Before carrying out any maintenance, cleaning or checking operations:

DANGER

Disconnect the electrical supply from the burner by means of the main system switch.

DANGER

Turn off the fuel interception tap.

Wait for the components in contact with heat sources to cool down completely.

6.2 Maintenance programme

6.2.1 Maintenance frequency

The gas combustion system should be checked at least once a year by a representative of the manufacturer or another specialised technician.

6.2.2 Safety test - with gas ball valve closed

It is fundamental to ensure the correct execution of the electrical connections between the gas solenoid valves and the burner to perform safely the commissioning.

For this purpose, after checking that the connections have been carried out in accordance with the burner's electrical diagrams, an ignition cycle with closed gas ball valve -dry test- must be performed.

1 The manual ball gas valve must be closed
2 The electrical contacts of the burner limit switch need to be closed
3 Ensures closed the contact of the low gas pressure switch
4 Make a trial for burner ignition

The start-up cycle must be as follows:

– Starting the fan for pre-ventilation
– Performing the gas valve seal control, if provided
– Completion of pre-ventilation
– Arrival of the ignition point
– Power supply of the ignition transformer
– Electrical Supply of solenoid gas valves

Since the manual gas ball valve is closed, the burner will not light up and its control box will go to a safety lockout condition.

The actual electrical supply of the solenoid gas valves can be verified by inserting a tester. Some valves are equipped with light signals (or close/open position indicator) that turn on at the same time as their power supply.

WARNING

IF THE ELECTRICAL SUPPLY OF THE GAS VALVES OCCURS AT UNEXPECTED TIMES, DO NOT OPEN MANUAL GAS BALL VALVE, SWITCH OFF POWER LINE; CHECK THE WIRES; CORRECT THE ERRORS AND REPEAT THE COMPLETE TEST.

6.2.3 Checking and cleaning

The operator must use the required equipment during maintenance.

Combustion

Check there are no occlusions or obstructions in the fuel supply or return lines, in the air suction areas, and in the combustion product waste pipe.

Carry out an analysis of the combustion flue gases.

Significant differences with respect to the previous measurements indicate the points where most care should be exercised during maintenance.

Combustion head

Check that the positioning of the combustion head is correct and that it is properly fixed to the boiler.
Open the burner and make sure that all components of the combustion head are in good condition, not deformed by the high temperatures, free of impurities from the surroundings and correctly positioned.

Burner

Check that there are not excess wear or loosen screws.
Clean the outside of the burner.

Fan

Check that the air damper is positioned correctly.
Check to make sure that no dust has accumulated inside the fan or on its blades, as this condition will cause a reduction in the air flow rate and provoke polluting combustion.

Boiler
Clean the boiler as indicated in its accompanying instructions in order to maintain all the original combustion characteristics intact, especially the flue gas temperature and combustion chamber pressure.

Gas train
Check that the gas train is suited to the burner capacity, the type of gas used and the mains gas pressure.

Electrode-probe
Checking the proper positioning of the ionisation probe and electrode as shown in Fig. 11 on page 14.

Pressure switches
Check that the air pressure switch and the gas pressure switch are set correctly.

Gas leaks
Make sure that there are no gas leaks on the pipe between the gas meter and the burner.

Gas filter
Change the gas filter when it is dirty.

Combustion
If the combustion values measured before starting maintenance do not comply with applicable legislation or do not indicate efficient combustion, consult the Tab. G on page 21 or contact our Technical Support Service to implement the necessary adjustments.

Let the burner run at full power for about 10 minutes, correctly calibrating all the components indicated in this manual. Then carry out a combustion check verifying:
– Percentage of CO_2 (%);
– CO content (ppm)
– NOx content (ppm)
– Ionisation current (μA)
– Smoke temperature at the flue

6.2.4 Safety components

The safety components must be replaced at the end of their life cycle indicated in Tab. K. The specified life cycles do not refer to the warranty terms indicated in the delivery or payment conditions.

Safety component	Life cycle
Flame control	10 years or 250,000 operation cycles
Flame sensor	10 years or 250,000 operation cycles
Gas valves (solenoid)	10 years or 250,000 operation cycles
Pressure switches	10 years or 250,000 operation cycles
Pressure adjuster	15 years
Servomotor (electronic cam) (if present)	10 years or 250,000 operation cycles
Oil valve (solenoid) (if present)	10 years or 250,000 operation cycles
Oil regulator (if present)	10 years or 250,000 operation cycles
Oil pipes/ couplings (metallic) (if present)	10 years
Flexible hoses (if present)	5 years or 30,000 pressurised cycles
Fan impeller	10 years or 500,000 start-ups

Tab. K

6.3 Opening the burner

DANGER

Disconnect the electrical supply from the burner by means of the main system switch.

DANGER

Turn off the fuel interception tap.

Wait for the components in contact with heat sources to cool down completely.

If maintenance of the combustion head is required, refer to the instructions given in “Operating position” on page 13.

For accessing to the interior of the burner, loosen the screws that secure the cover and proceed with the maintenance operation.

DANGER

Operating safety hazards

Repairs to the following components may only be carried out by the respective manufacturers or by personnel instructed by them:
- fan motor
- actuator
- air damper servomotor
- electromagnetic valves
- burner programmer

Check the operation
- Start-up of the burner with a sequence of functions (see chapter “Operation sequence of the burner” on page 22)
- Ignition device
- Air pressure switch
- Flame monitoring
- Tightness test of components to the passage of fuel

After carrying out maintenance, cleaning or checking operations, reassemble the cover and all the safety and protection devices of the burner.

7 Faults - Possible causes - Solutions

7.1 Tracing the causes of the malfunctioning

The control box features a diagnostics function through which any causes of malfunctioning are easily identified (indicator: **RED LED**).

To use this function, you must wait at least 10 seconds once it has entered the safety condition (**lockout**), and then press the reset button.

The control box generates a sequence of pulses (1 second apart), which is repeated at constant 3-second intervals.

Once you have seen how many times the light blinks and identified the possible cause, the system must be reset by holding the button down for 1 - 3 seconds.

RED LED lit wait for at least 10s	Lockout	Press reset for > 3s	Pulses	3s interval	Pulses
			● ● ● ● ● ●		● ● ● ● ● ●

Tab. L

Below is a list of the possible methods for resetting the control box and for using the diagnostics.

Pressing the button	Control box status
From 1 to 3 seconds	Reset of the control box without visualisation of the visual diagnostics.
More than 3 seconds	Visual diagnostics of the lockout condition: (LED blinks at 1-second intervals).
More than 3 seconds starting from the condition of visual diagnostics	Diagnostic software using an optical interface and PC (possibility of displaying the hours the machine has been running, faults, etc..).

Tab. M

7.1.1 Control box reset

To carry out the control box reset, proceed as follows:

- ➤ press the button for between 1 and 3s.
- ➤ The burner restarts 2 seconds after the button is released.
- ➤ In case the burner does not restart it is necessary to check if the limit thermostat (TL) is closed.

7.1.2 Visual diagnostics

Indicates the type of burner malfunction causing lockout. To visualise the diagnostics proceed as follows:

- ➤ keep the button pressed for more than 3s. from the fixed red led condition (burner lockout). A yellow light blinks to tell you the operation is done.
- ➤ Release the button once the light has blinked.
- ➤ The number of blinks indicates the reason for the malfunctioning (refer to the coding in Tab. O).

7.1.3 Software diagnostics

Gives an analysis of the life of the burner, through optical connections with a PC showing the working hours, number and types of lockout, control box serial number etc.

To view diagnostics, proceed as follows:

- ➤ keep the button pressed for more than 3 seconds from the fixed red led condition (burner lockout).
  A yellow light blink to tell you the operation is done.
- ➤ Release the button for 1 second and then press again for over 3 seconds until the yellow light blinks again.
- ➤ Once the button is released, the red LED will flash intermittently with a higher frequency: only now can the optical link be activated.

Once the operations have been carried out, it is necessary to reset the initial state of the control box using the reset procedure.

The sequence of led pulses issued by the control box identifies the possible types of malfunction, which are listed in the table Tab. N.

Signal	Possible cause
2 blinks ● ●	No stable flame signal is detected within the safety time: – faulty ionisation probe; – faulty gas valve; – phase/neutral connections inverted; – faulty ignition transformer; – burner not adjusted (insufficient gas).
3 blinks ● ● ●	Minimum air pressure switch fails to close: – check the intervention of the VPS lockout; – faulty air pressure switch; – air pressure switch not adjusted; – the fan motor is not working; – intervention of maximum air pressure switch.
4 blinks ● ● ● ●	Minimum air pressure switch does not switch, or else light present in chamber prior to ignition: – faulty air pressure switch; – air pressure switch not adjusted.
7 blinks ● ● ● ● ● ● ●	Loss of flame during operation: – burner not adjusted (insufficient gas); – faulty gas valve; – short-circuit between the ionisation probe and the earth.
10 blinks ● ● ● ● ● ● ● ● ● ●	– Connection error or internal fault.

Tab. N

Here below you can find some causes and the possible solutions for some problems that could cause a failure to start or a bad working of the burner

In most cases, an operation irregularity leads to the lighting up of the signal inside the reset button of the control box (Fig. 4 on page 9).

When lockout lamp lights the burner will attempt to light only after pushing the reset button After this if the burner functions correctly, the lockout can be attributed to a temporary fault.

Otherwise, if the lockout persists the cause of the fault should be sought and the solutions shown in Tab. O put into effect.

WARNING

In the event the burner stops, in order to prevent any damage to the installation, do not unblock the burner more than twice in a row. If the burner locks out for a third time, contact the customer service.

DANGER

In the event there are further lockouts or faults with the burner, the maintenance interventions must only be carried out by qualified, authorised personnel, in accordance with the contents of this manual and in compliance with the standards and regulations of current laws.

Signal	Problem	Possible cause	Recommended remedy
2 blinks ● ●	Once the pre-purging phase and safety time have passed, the burner goes into lockout without the appearance of the flame	The operation solenoid lets little gas through	Increase
		One of the two solenoid valves does not open	Replace them
		Gas pressure too low	Increase pressure at governor
		Ignition electrode incorrectly adjusted	Adjust it
		Electrode grounded due to broken insulation	Replace
		High voltage cable defective	Replace
		High voltage cable deformed by high temperature	Replace and protect
		Faulty ignition transformer	Replace
		Incorrect valve or transformer electrical wiring	Check
		Defective control box	Replace
		A closed valve upline the gas train	Open
		Air in pipework	Bleed air
		Gas valves unconnected or with interrupted coil	Check connections or replace coil

Faults - Possible causes - Solutions

Signal	Problem	Possible cause	Recommended remedy
3 blinks ● ● ●	The burner does not switch on, and the lock-out appears	Air pressure switch in operating position	Adjust or replace
	The burner starts and then goes into lockout	Air pressure switch inoperative due to insufficient air pressure:	
		Air pressure switch poorly adjusted	Adjust or replace
		Pressure switch pressure point pipe blocked	Clean
		Combustion head poorly regulated	Adjust
		High pressure in the furnace	Connect air pressure switch to fan suction line
	Lockout during pre-purging phase	Defective motor control contactor	Replace
		Defective electrical motor	Replace
		Motor lockout	Replace
4 blinks ● ● ● ●	The burner starts and then goes into lockout	Flame simulation	Replace the control box
	Lockout when the burner stops	Permanent flame in the combustion head or flame simulation	Eliminate persistence of flame or replace control box
6 blinks ● ● ● ● ● ●	The burner switches on, but then stops in lockout	Defective or incorrectly adjusted servomotor	Adjust or replace
7 blinks ● ● ● ● ● ●	The burner goes into lockout immediately following the appearance of the flame	The operation solenoid lets little gas through	Increase
		Ionisation probe incorrectly adjusted	Adjust
		Insufficient ionisation (less than 5 μA)	Check probe position
		Earth probe	Withdraw or replace cable
		Burner poorly grounded	Check grounding
		Phase and neutral connections inverted	Invert them
		Defective flame detection circuit	Replace control box
	Lockout of burner upon transit between 1st and 2nd stage, or between 2nd and 1st stage	Too much air or too little gas	Adjust air and gas
	Burner goes into lockout during operation	Probe or ionisation cable grounded	Replace worn parts
10 blinks ● ● ● ● ● ● ● ● ● ●	The burner does not switch on, and the lock-out appears	Incorrect electrical wiring	Check
	The burner goes into lockout	Defective control box	Replace
		Presence of electromagnetic disturbances in the thermostat lines	Filter or eliminate
		Presence of electromagnetic disturbance	Use the radio disturbance protection kit
No blink	The burner does not start	No electricity supply	Close all switches and check connections
		A limiter or safety control device is open	Adjust or replace
		Line fuse blocked	Replace
		Defective control box	Replace
		No gas supply	Open the manual valves between contactor and train
		Mains gas pressure insufficient	Contact your gas company
		Minimum gas pressure switch fails to close	Adjust or replace
		Servomotor fails to move to min. ignition position	Replace

Signal	Problem	Possible cause	Recommended remedy
	The burner continues to repeat the start-up cycle, without lockout	The gas pressure in the gas mains lies very close to the value to which the gas pressure switch has been set. The sudden pressure drop after valve opening causes the temporary opening of the pressure switch itself; the valve immediately closes and the burner comes to a halt. Pressure increases again, the pressure switch closes again and the ignition cycle is repeated. The sequence repeats endlessly.	Reduce the intervention pressure of the minimum gas pressure switch. Replace the gas filter cartridge.
	Ignition with pulsations	Poorly adjusted head	Adjust
		Ignition electrode incorrectly adjusted	Adjust it
		Incorrectly adjusted fan air damper: too much air	Adjust
		Output during ignition phase is too high	Reduce
	The burner does not pass to the 2nd stage	Remote control device TR fails to close	Adjust or replace
		Defective control box	Replace
		Defective servomotor	Replace
	Burner stops with air damper open	Defective servomotor	Replace

Tab. O

WARNING

If start-up problems persist even after the above-mentioned interventions, first replace the control box, check that there are no short-circuits in the lines of the motor, the gas solenoid valves, the ignition transformer and the external signals.

A Appendix - Accessories

Long head kit

Burner	Standard length (mm)	Long head length (mm)	Code
RIELLO 40 GS20D	120	280	3000873

Conical flame funnel with diffuser disc

Burner	Projection (mm)	Code
RIELLO 40 GS20D	+ 23	3000919

LPG kit

Burner	Code
RIELLO 40 GS20D	3000886

Town gas kit

Burner	Code
RIELLO 40 GS20D	3000894

Faults kit

Burner	Code
RIELLO 40 GS20D	3001180

7 pin plug kit

Burner	Code
RIELLO 40 GS20D	3000945

Continuous purging kit

Burner	Code
RIELLO 40 GS20D	3010094

Software diagnostics kit

Burner	Code
RIELLO 40 GS20D	3002719

Gas trains in compliance with EN 676

Please refer to manual.

RIELLO S.p.A.
I-37045 Legnago (VR)
Tel.: +39.0442.630111
http:// www.riello.it
http:// www.riello.com

Subject to modifications